PUMPS SERIES

HC150 / HC101

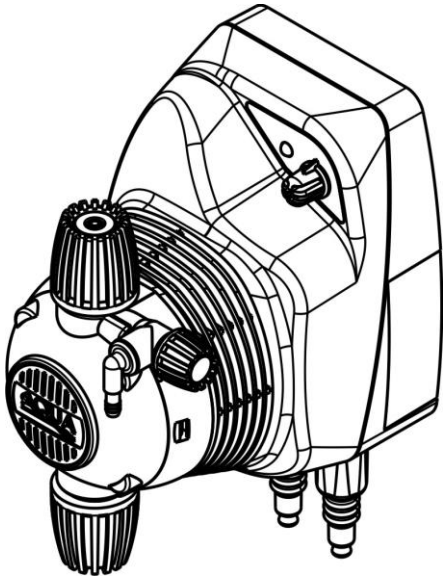

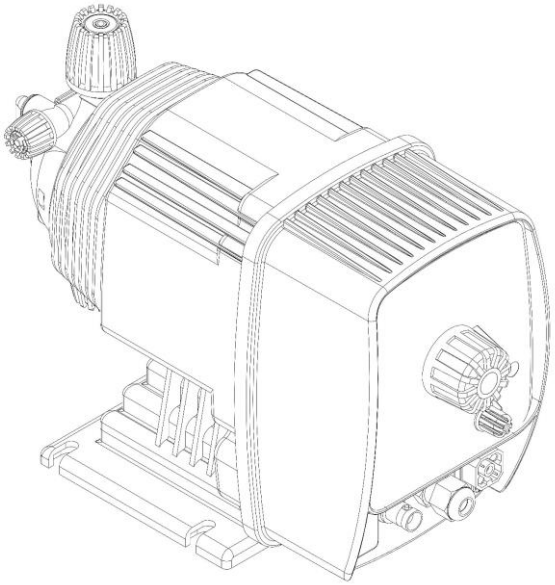

AQUA INDUSTRIAL GROUP

CE

DECLARATION OF CONFORMITY

Company:	**AQUA S.p.A.**
Address:	**Via T. Crotti, 1 - 42018 - San Martino in Rio (RE)**

Hereby declares that the products named:

- **HC150**

Responds to the principal features of the following European Directives:

- **2014/30/CE of 26/02/2014** - *Harmonization of the laws of the Member States relating to electromagnetic compatibility – EMC Directive*
- **2014/35/CE of 26/02/2014** - *Harmonization of the laws of the Member States relating to the making available on the market of electrical equipment designed for use within certain voltage limits – Low Voltage Directive*
- **2011/65/UE of 08/06/2011 with subsequent update 2015/863 of 31/03/2015** – *ROHS III Directives*
- **2012/19/UE of 04/07/2012** - *WEEE Directives for electrical and electronic waste*

This declaration is issued under the responsibility of Aqua S.p.A.

San Martino in Rio (RE) - 08 settembre 2020

Davide Vezzani
Certification Manager - Aqua S.p.A.

AQUA S.p.A.

CONTENTS

1 INTRODUCTION 4
1.1 Warnings 4
1.2 Models 5
1.3 Available flows 5
1.4 Standards of reference 6
1.5 Technical features 6
2.0 INSTALLATION AND TECHNICAL FEATURES 7
2.1 General regulations 7
2.2 Accessories included 7
2.3 Electrical connections 7
2.3.1 Power supply 7
2.3.2 Low level probe 7
2.3.3 Pulse Emission Counter – only for model PI 8
2.3.4 Current signal – only for model mA 8
2.4 Hydraulic connection 9
2.5 Principle of operation 9
3 PROGRAMMING THE PUMPS 10
3.1 HC150 / HC101 costant 10
3.1.1 Scale change procedure 10
3.1.2 Meaning of two-colour LED 10
3.2 HC150 / HC101 mA 11
3.2.1 Meaning of two-colour LED 11
3.2.2 Scale change procedure 12
3.2.3 How to change the operating mode 12
3.3 HC150 / HC101 PI 13
3.3.1 Interval scale change procedure 13
3.3.2 Meaning of two-colour LED 14
3.3.3 How to change the operating mode 14
3.3.4 How to choose the pump 15
4 MAINTENANCE 16
4.1 General regulations 16
4.2 Periodic maintenance 16
4.3 How to intervene 16
4.4 How to change parts after normal wear 16
4.5 Troubleshooting 17
5 Chemical Compatibility Table 18
6 Return to the After-sales service 19
7 GUARANTEE CERTIFICATE 19
8 Dimensioni – Dimensions 20
9 Esploso / Exploded view 24

1 INTRODUCTION

Thank you for having purchased an Aqua product.
The HC150 / HC101 series solenoid driven dosing pumps represent the ideal solution for dosing small amounts of chemical products.
The pumps are regulated through analogue controls, including a two-colour LED and a regulating knob.

The HC101 model has also a mechanical stroke length facility included in addition to the on/off switch and electronic stroke frequency control function. The operator may now make an extra manual mechanical stroke length adjustment to the dosing pump, thus further increasing the pumps accuracy, and greatly increasing the "turn down ratio" to achieve much lower dosing rates. The stroke length adjustment should only be made when the pump is running, and is achieved by pushing and turning the knob. There are 20 settings available between 0% and 100%.

NB. Below 10% the adjustment will not be linear.

The figure shows the large adjustment knob of the mechanical stroke length, in a central position:

ATTENTION:
THIS SYMBOL INDICATES SECTIONS TO READ CAREFULLY!

1.1 Warnings

The manual for the HC150 / HC101 series pumps has the purpose of providing all of the information required for the correct installation and maintenance of the products that allows you to achieve the best results over time.
To this end it is extremely important that you read the warnings listed below as they provide the necessary indications for safe installation, operation and maintenance.

- **At the time of receiving the product check the integrity of the pump and all of its parts. In case of irregularities promptly notify qualified personnel before performing any operations.**
- **This manual must be stored carefully for future consultation.**
- **Before installing the pump make sure that the details provided on the adhesive plate attached to the pump correspond to those of the electrical system.**
- **Do not handle the equipment with wet hands or feet.**
- **Do not leave the equipment exposed to atmospheric agents.**
- **The equipment must be handled by qualified personnel.**
- **If any irregularities are experienced during pump operation, cut off the power supply and contact one of our customer care centres repairs.**
- **In order for the pump to operate correctly it is necessary to use original parts or accessories. The manufacturer is relieved of any responsibility in the case of any breakdowns due to tampering or use of non-conforming parts and accessories**
- **The electrical system must be in compliance with the regulations in force of the country where it is built.**
- **The ambient temperature for operation must not exceed 45° C.**
- **Accordingly, we consider it necessary to follow the contents of this manual carefully, especially regarding maintenance, in order to obtain an elevated level of reliability and long-lasting operation.**
- **The manufacturer declines all responsibility for any intervention on the equipment carried out by unqualified personnel.**
- **Verify that the earth system is perfectly functional and complies with the applicable regulations.**
- **Ensure the unit is connected to a circuit protected by a highly sensitive (0.03A) RCCB circuit breaker. If unsure please consult a competent electrician.**
- **Verify that the rated values of the pump are compatible with those of the mains.**
- **Never install the pump directly in parallel with inductive loads (e.g. motors/solenoid valves) if necessary, use an isolating relay.**

There are 2 protection devices inside the pump: a varistor and a fuse.

- **If it is necessary to remove the pump from the system, it is essential that the rubber discs are put back in so as to avoid liquid leaking out from the pump head.**
- **During the installation phase make sure that the delivery tube is attached correctly, to avoid it being subject to wear when rubbing against rigid bodies. Also avoid unnecessary curves in both suction and delivery.**
- **The connection from the pump to the system must be made always and in any case using the injection valve (1/2" Gm) provided with the installation kit.**
- **The PVC Crystal tube (soft) is only connected in suction (on the foot strainer side). On the other hand, the polyethylene tube needs to be attached to delivery making sure that the cut of the tube is clean and has not caused lateral crushing; it is advisable to use a utility knife rather than scissors.**
- **All operations must be carried out wearing suitable gloves and eyewear for the product being used, consult the supplier of the chemical product accordingly**

1.2 Models

The HC150 / HC101 series are composed of three models:

HC150 / HC101 costant
A constant dosing pump, with the possibility of regulating the flow between 0 and 100% of the nominal flow. Using the regulating knob it is possible to set the dosage frequency and therefore the flow. The pump is equipped with two regulating scales so that you always have an exact dosage for any requirement: 0…100% and 0…20%.
HC150 / HC101 mA
The pump can operate in constant mode or in proportional current mode (mA).
In constant mode it operates like model HC150 costant, whereas in proportional mode mA, the number of impulses is proportional to the current signal connected to the BNC - red connector.
HC150 / HC101 PI
The pump can operate in constant mode as well as proportional mode to pulses sent from a counter.
In constant mode it operates like model HC150 costant whereas in proportional pulse mode the pump provides an injection for each "N" of pulses that the pump receives on the BNC – red connector, or N injections for each pulse.
It is possible to set the "N" value between 1 and 1000 in division, or between 1 and 10 in moltiplication*; setting the "N" value has been made easier as the interval has been divided into 11 sub-intervals so that you always have the same resolution on the regulating knob.*

1.3 Available flows

For each series it is possible to have several models depending on the performance you wish to obtain:

Description	Flow L/h	Pressure Bar	Frequency (max) BPM	Flow cc per dose
HC150 Mod. 0	1,5	5	100	0,25
	2	3		0,33
	3	1		0,50
HC150 Mod. 1	2	8	120	0,28
	5	5		0,69
	7	2		0,97
HC150 Mod. 2	7	4	150	0,78
	8	2		0,89
	10	0		1,11
HC150 Mod. 3	3	12	120	0,42
	4	10		0,56
	5	8		0,69
HC150 Mod. 4	10	4	180	0,93
	12	2		1,11
	14	0		1,30
HC150 Mod. 5	2	20	75	0,44
	2,5	18		0,56
	3	15		0,67

Description	Flow L/h	Pressure Bar	Frequency (max) BPM	Flow cc per dose
HC101 Mod. 1	2	8	120	0,28
	5	5		0,69
	7	2		0,97
HC101 Mod. 2	7	4	150	0,78
	8	2		0,89
	10	0		1,11
HC101 Mod. 3	3	12	150	0,33
	4	10		0,44
	5	8		0,55
HC101 Mod. 4	10	4	180	0,93
	12	2		1,11
	14	0		1,30
HC101 Mod. 5	2	20	75	0,44
	2,5	18		0,56
	3	15		0,67

1.4 Standards of reference

Our pumps are manufactured according to General Standards in force and in compliance with the following European Directives:

n° 2014/30/CE “ E.M.C.
n° 2014/35/CE “DBT Low Voltage Directive”
n° 2011/65/UE , 2012/19/UE “direttive RoHs e WEEE”

1.5 Technical features

General

- Power supply: 230VAC ± 15% - 50/60Hz
- Average absorption at the maximum frequency of operation: 16 W.
- Maximum frequency of operation HC150: 120 BPM (mod. 1 and 2) 150 BPM (mod. 3).
- Maximum frequency of operation HC101: 120 BPM (mod. 1), 150 BPM (mod. 2 e 3), 180 BPM (mod. 4), 75 BPM (mod. 5).

Level input

- Connection through a black BNC connector.
- Voltage-free contact (NPN transistor).

Pulse input - only model HC150 / HC101 PI

- Connection through a red BNC connector.
- Piloting is performed with a voltage-free control (reed) or with an NPN transistor.
- Maximum frequency: 100 Hz.
- Minimum on and off time of the pulse: 5 ms.

Current input - only model HC150 / HC101 mA

- Connection through a red BNC connector.
- Proportionality interval: 4…20 mA.
- Maximum input current: 25 mA.
- Resistive load: 120 ohm.
- ***No galvanic separation***.

2.0 INSTALLATION AND TECHNICAL FEATURES

2.1 General regulations

Pump installation must be carried out as follows:

- On a horizontal support (ex.: storage tank) or on the wall-mount bracket (optional) as long as the pumps remains in a vertical position +/- 15°.
- Away from sources of heat in dry locations, at a maximum temperature of 45° C, and a minimum of 0° C.
- In a ventilated environment and easily accessible to an operator for periodic maintenance.
- Above the level of the liquid to be dosed, at a maximum height of 1.5 metres, nevertheless bearing in mind that if the requirements of the system envision the need to position the pump below the level of the liquid (positive suction head), in order to avoid problems with the siphon, always use the injection valve or a counter pressure valve.
- Do not install the pump above the tank when using liquids that emit fumes, unless it is sealed shut.

2.2 Accessories included

When you purchase the pump, it includes everything required for correct installation, specifically:

- Suction filter (1 pc).
- Injection valve (1 pc).
- 4 x 6 polyethylene delivery tube (2 m.).
- PVC Crystal suction tube (2m.)
- PVC Crystal tube to insert into the purge (2 m.).
- Wall mounting bracket (1 pc).
- Dowels and screws.

2.3 Electrical connections

2.3.1 Power supply

The pump is supplied, as standard, with a three-pole power cable, but without a plug. Connect the cable to a suitable 230 Vac 50/60 Hz power supply, which can be with plug or with direct connection to the electrical panel with a suitable disconnector.
If it is necessary to replace the power cable, this must be done by specialized personnel. Open the pump by removing the 4 screws located on the rear of the case (see fig. 1 chap. 8) and connect the cable, through the cable gland, exactly like the existing cable, using cable H05VV-F 3x0.75 mm2. Close the pump after connection.

2.3.2 Low level probe

Connect the black- BNC connector to the corresponding connector located at the bottom of the pump.

The input for the low level probe has an hysteresis of 3 seconds when the alarm is either activated or deactivated.

2.3.3 Pulse Emission Counter – only for model PI

HC150: Connect the red- BNC connector to the corresponding connector located at the bottom of the pump.

HC101: The pulse input is suitable for:

- Relè input without voltage
- Digital input Type NPN with maximum voltage < 1 V <u>(the polarity must be respected 3 -, 4 +)</u>

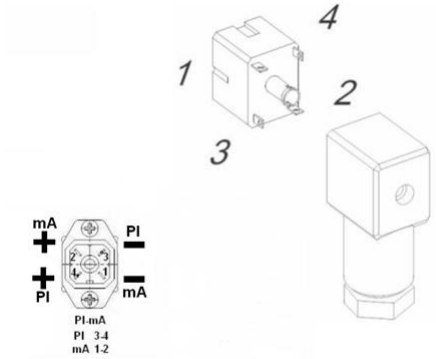

2.3.4 Current signal – only for model mA

HC150: Connect the red- BNC connector to the corresponding connector located at the bottom of the pump. Whereas for the connection on the instrument you must beware of the polarity, as shown in the figure below:

HC101: connector Hirschmann:

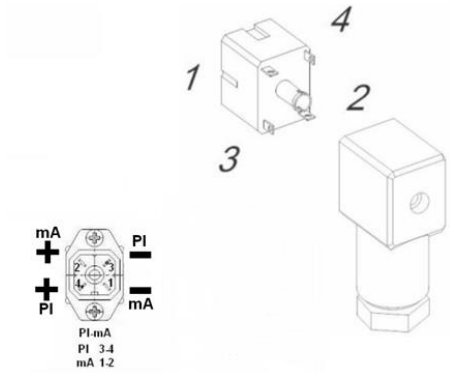

2.4 Hydraulic connection

After having positioned the pump correctly (see general regulations) proceed with making the connections.

Suction: Connect the suction tube (soft PVC Crystal) to the foot strainer included by inserting it into the hose connection, secure the tube by tightening the ring nut. When using the low level probe, it must be connected to the filter using the bracket provided. Position the foot strainer inside the liquid draught tank. Connect the other end to the pump suction (lower part of the pump head), unscrew the ring-nut from the fitting, remove the adapter, the pipe support and the white rubber disc. Slot the tube through the ring nut, then through the adapter, insert the tube into the 4x6 pipe support. Screw the ring nut onto the pump head, lock it all together by tightening the ring nuts all the way. See figure 3.

Delivery: The connection from the pump to the system must be made always and in any case using the injection valve (1/2” Gm) provided with the installation kit. After having applied a 1/2" Gf fitting to the duct of the system to be treated, seal the injection valve with teflon and insert it into the tube at the point where the product will be injected. Unscrew the ring nut, insert the delivery tube as far as it will go (rigid polyethylene) onto the hose connection of the valve fitting, lock it all together by tightening the valve. Connect the other end to the pump delivery (top part of the pump head) repeating the operation as described above. See figure 3.

Purge: Connect one end of the tube for manual purge (PVC crystal) to the hose connection located on the bottom right of the pump head, while the other end goes inside the liquid draught tank. See figure 4.

INSTRUCTIONS FOR PRIMING
To prime the pump in case of excessive counter-pressure in delivery, turn the knob located on the top right of the pump head by a quarter or half rotation as shown in figure 4 until the pump head itself is completely full.
Screw the knob back on and tighten it.

2.5 Principle of operation

The operation of the dosing pump is guaranteed by a teflon membrane mounted on the piston that is driven by an electromagnet that receives pulses in direct current from an electric circuit.
The movement of the piston produces pressure on the membrane, by effect of a counter opening and closing of the suction and delivery valve the liquid found inside is expelled.
At the end of each pulse the spring, with the opposite effect of the magnet, brings the piston back to the initial position, drawing liquid in through the suction valve.
The materials used to build it also make it suitable for particularly aggressive liquids. In any case we advise you to consult the various compatibility tables or our technical office.

Overall dimensions

- HC150 series pump – wall-mounted (fig. 1)
- HC150 series pump – with base (fig. 2)
- HC101 series pump – with base (fig. 2a)

Connections and exploded views

- Tube connections to pump head (fig. 3)
- Manual purge (fig. 4)
- Connection of the low level probe (Optional) (fig. 5)
- Exploded view of HC150 series (fig. 6)
- Exploded view of HC101 series (fig. 6a)
- Exploded view of pump head ball valves (fig. 7)

3 PROGRAMMING THE PUMPS

3.1 HC150 / HC101 costant

Programming the HC150 / HC101 costant pump or in constant mode is based on the setting, using the knob, regulating the number of pulses per minute that the pump must carry out.
It is possible to regulate the number of pulses per minute, and therefore the flow of the pump, using two regulating scales:

- Full: 0…100%
- Reduced: 0…20%.

3.1.1 Scale change procedure

The following procedure allows you to switch from one scale to the other.

ⓘ **To perform this operation it is advisable to use a medium flat-tip screwdriver.**

- Turn the regulating knob to the minimum 0% (fully rotated counter clockwise):

- The frequency of the flashing LED (green) indicates the scale that is currently in use:
  quick flashing: 0…100% *slow flashing: 0…20%.*

- Turn the regulating knob to the maximum position (fully rotated clockwise) immediately followed by (within 2 seconds) bringing the timer back to the minimum position.

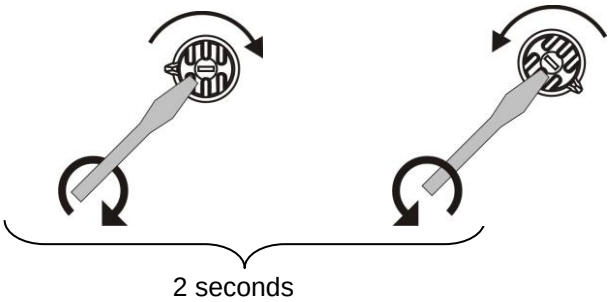

- The frequency of the flashing LED has now been changed to indicate the change in regulating scale, repeat again if necessary.

3.1.2 Meaning of two-colour LED

Colour of the LED	Status of the LED	Position of the regulating knob	Operating status of the pump
Green	Flashing	Different from 0%	ON – injection with each flash of the LED
Green	Flashing	0%	OFF – Signals the scale Quick flashing: 0…100% Slow flashing: 0…20%.
Red	Steady	Different from 0%	OFF – level alarm
Red	Flashing	Different from 0%	OFF – temperature alarm

3.2 HC150 / HC101 mA

The pump can operate in constant mode or in proportional current mode (mA).
In constant mode it operates like model HC150 costant, whereas in proportional mode mA, the number of impulses is proportional to the current signal connected to the BNC - red connector.
Using the regulating knob it is possible to set the maximum flow of the pump associated to the maximum input current value, i.e. 20 mA.
After which the pump will dose proportionally between 4 and 20 mA, as shown in the graph provided below:

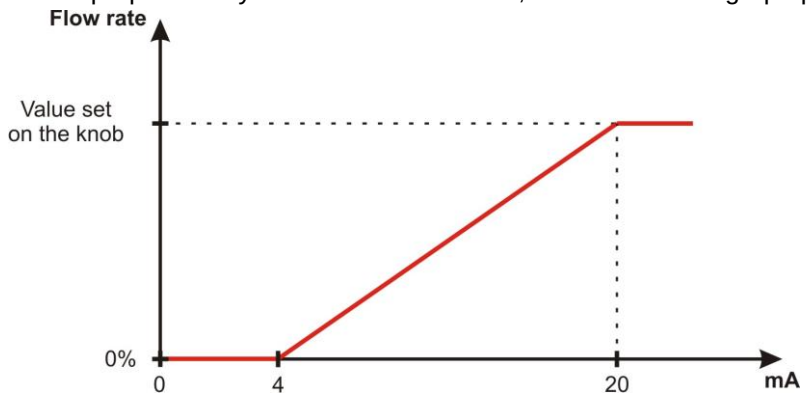

In proportional current mode it is also possible to use one of the two pump operating scales, as in the constant version.

The HC150 mA pumps can be piloted, for proportional dosing, from any regulating instrument that is capable of providing a current signal between 4-20mA (ex.: pH-metres, redox meters, residual chlorine meters, conductivity meters etc.)
This signal must be applied to a cable with a BNC - red pump connector, being careful of the polarity:

- Centre wire: positive.
- Sheath: negative.

3.2.1 Meaning of two-colour LED

The colour of the LED immediately indicates the type of proportional pump operation, in fact:

- Green LED: the HC150 mA pump is in constant mode
- Orange LED: the HC150 mA pump is in proportional mode

Below is a table of LED operation:

Colour of the LED	Status of the LED	Position of the regulating knob	Operating status of the pump
Orange	Flashing	Different from 0%	ON – injection with each flash of the LED
Orange	Flashing	0%	OFF – Signals the scale Quick flashing: 0÷100% Slow flashing: 0÷20%.
Red	Steady	Different from 0%	OFF – level alarm
Red	Flashing	Different from 0%	OFF – temperature alarm
Orange	Steady	Different from 0%	OFF – input current <= 4 mA
Red Green	Steady Flashing	Different from 0%	ON – input current >20 mA

3.2.2 Scale change procedure

The following procedure allows you to switch from one scale to the other.

ⓘ **To perform this operation it is advisable to use a medium flat-tip screwdriver.**

- Turn the regulating knob to the minimum 0% (fully rotated counter clockwise):

- The frequency of the flashing LED (green) indicates the scale that is currently in use:
  quick flashing: 0…100% *slow flashing: 0…20%.*

- Turn the regulating knob to the maximum position (fully rotated clockwise) immediately followed by (within 2 seconds) bringing the timer back to the minimum position.

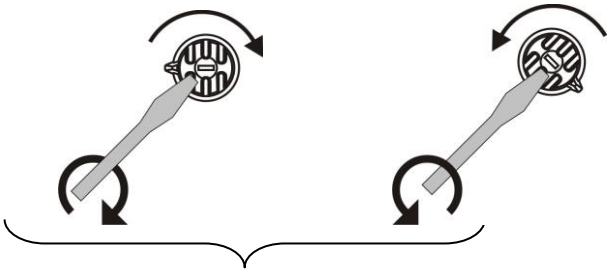

The frequency of the flashing LED has now been changed to indicate the change in regulating scale, repeat again if necessary**.**

3.2.3 How to change the operating mode

With the proportional pumps it is possible to switch the operating mode from proportional to constant and vice versa, following the procedure described below.

ⓘ **To perform this operation it is advisable to use a medium flat-tip screwdriver.**

- Turn the regulating knob to maximum **max** (fully rotate clockwise):

- Turn the regulating knob to the minimum position 0% (fully rotate counter clockwise) immediately followed by (within 2 seconds) bringing the timer back to the maximum position.

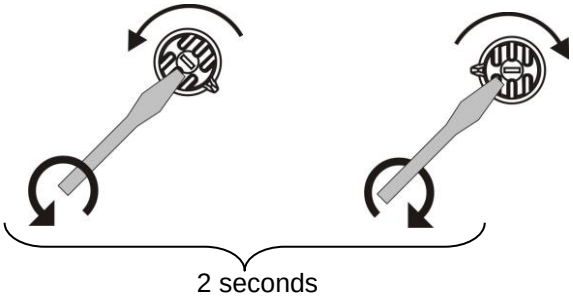

3.3 HC150 / HC101 PI

The pump can operate in constant mode as well as proportional mode to pulses sent from a counter.
In constant mode it operates like model HC150 / HC101 costant whereas in proportional pulse mode the pump provides an injection for each “N” of pulses that the pump receives on the BNC – red connector, or N injections for each pulse.
<u>It is not designed to memorise the input pulses in case the frequency exceeds the maximum frequency of pump operation.</u>
The "N" parameter can be set between 1 and 1000 in division, or between 1 and 10 in moltiplication, in fact it is possible to select 11 interval scales and then using the regulating knob select the desired value.
The selectable scale intervals are:

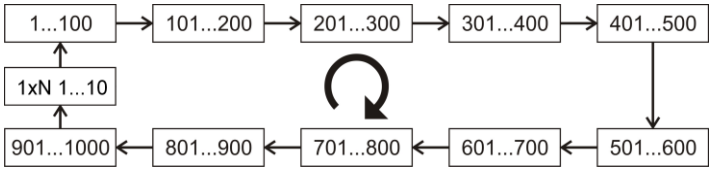

When setting the "N" parameter remember that in division when the knob is at its maximum it corresponds to the lowest N value of the selected interval.

3.3.1 Interval scale change procedure

The following procedure allows you to switch from one interval scale to the other.

To perform this operation it is advisable to use a medium flat-tip screwdriver.

- Turn the regulating knob to the minimum 0% (fully rotated counter clockwise):

- The number of flashes of the LED (orange in division, green in moltiplication) indicates the scale that is currently in use:

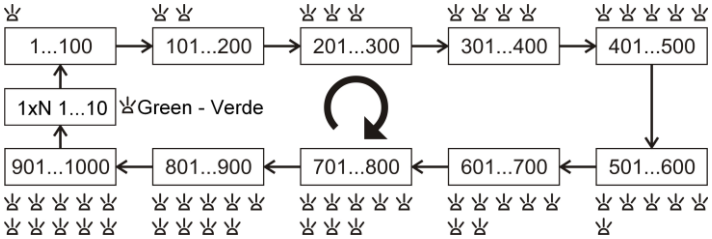

This is a circular menu, therefore if it exceeds the desired interval, it is not possible to go back, but you must repeat the procedure three times until you reach the required interval again.

- Turn the regulating knob to the maximum position (fully rotated clockwise) immediately followed by (within two seconds) bringing the timer back to the minimum position.

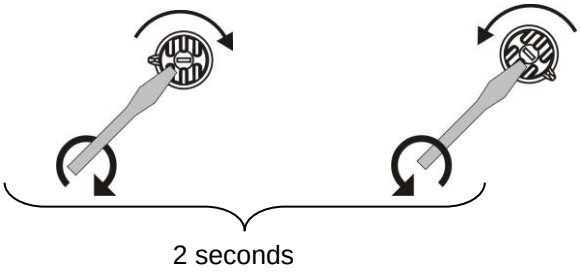

- The number of flashes of the LED (orange in division, green in moltiplication) indicates the selected interval scale:

1 flash => 1...100 2 flashes => 101…200 3 flashes => 201…300

until you reach: 10 flashes => 901…1000 and then to 1 flash green => 1…10 (1xN)

3.3.2 Meaning of two-colour LED

The colour of the LED immediately indicates the type of proportional pump operation, in fact:

- Green LED: the HC150 / HC101 PI pump is in constant mode
- Orange LED: the HC150 / HC101 PI pump is in proportional mode

Below is a table of LED operation:

Colour of the LED	Status of the LED	Position of the regulating knob	Operating status of the pump
Orange	Flashing	Different from 0%	ON – injection with each flash of the LED
Orange	Flashing	0%	OFF – Signals the interval scale 1 flash => 0...100 2 flashes => 101…200 3 flashes => 201…300 4 flashes => 301…400 5 flashes => 401…500 6 flashes => 501…600 7 flashes => 601…700 8 flashes => 701…800 9 flashes => 801…900 10 flashes => 901…1000
Green	Flashing	0%	OFF – Signals interval scale 1 flash => 0…10 (1xN)
Red	Steady	Different from 0%	OFF – level alarm
Red	Flashing	Different from 0%	OFF – temperature alarm

3.3.3 How to change the operating mode

With the proportional pumps it is possible to switch the operating mode from proportional to constant and vice verse, following the procedure described below.

ⓘ **To execute this operation it is advisable to use a medium flat-tip screwdriver.**

- Turn the regulating knob to maximum **max** (fully rotate clockwise):

- Turn the regulating knob to the minimum position 0% (fully rotate counter clockwise) immediately followed by (within two seconds) bringing the timer back to the maximum position.

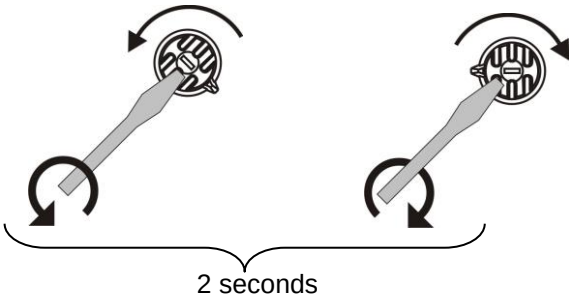

3.3.4 How to choose the pump

As the number of m^3 of water to be treated in the system is known, and the quantity of product to be dosed, expressed in P.P.M. (parts per million) it is possible to define the minimum hourly capacity of the dosing pump required, using the following formula:

$$L/H = \frac{PPM \times K \times m^3}{1000}$$

L/H	flow of the HC150 PI pump.
PPM	quantity of product to dose (gr/m^3).
K	concentration of the chemical product to dose (pure product K=1). Example: Sodium hypochlorite at 12%; K = 100:12 = 8.3.
m^3	maximum flow of the water to be treated expressed in m^3 / H.

3.3.5 How to set the “N” parameter in 1/N mode

To identify the value of N (position of the knob) proceed as follows:

$$N = \frac{imp/L \times cc}{PPM \times K} \times 1000$$

N	number to set on the HC150 PI pump.
pul/L	pulses per litre provided by the counter.
cc	quantity of product dosed per single injection (expressed in cc) of the pump.
PPM	quantity of product to dose (gr/m^3).
K	concentration of the chemical product to dose (pure product K=1).

If in the calculation the "N" parameter is:

- N<1 (N less than 1) it is necessary to install a counter with a number higher than the number of pulses per litre or a pump with a greater capacity per injection.
- N>1000 (N greater thasn1000) it is necessary to install a pump with a lower capacity per injection.

ⓘ **When setting the "N" parameter remember that when the knob is at its maximum it corresponds to the lowest N value of the selected interval.**

4 MAINTENANCE

4.1 General regulations

- Periodic maintenance is of fundamental importance to keep the pump in good running order and make it last over time.
- The tips provided below must be followed systematically and to the letter. It is extremely difficult to define the standard times required for maintenance beforehand, as the factors that determine the wear of the pump, and in particular the parts that are in contact with the liquid, are numerous.
- This also applies to the type of product used to clean the materials that are in contact with it (valves, etc.) as it depends on its compatibility with the chemical product being dosed. Having said this, we can take as an example a product, such as sodium hypochlorite, that develops crystals, which is often used with our pumps, and with which we have a great deal of experience, and trace an identity kit of the type of maintenance required.

4.2 Periodic maintenance

- The level of the liquid to dose on the system must be checked very often, so as to avoid the pump from working on empty.
- The pump materials that are in contact with the chemical product are: pump head, foot strainer and injection valve must be checked and cleaned at least every three months. If the products are particularly aggressive increase the frequency of cleaning.
- If the pump is left unused for a prolonged period the product may form build up that can cause malfunctions the next time it is started up. We therefore recommend always cleaning the valves thoroughly (wash under running water) every time the pump is started after prolonged periods of inactivity. Alternatively, it is possible to wash the pump beforehand by running it for at least 30 minutes with the foot strainer immersed in water, before leaving the pump to rest for a long period of time.

4.3 How to intervene

Before performing any type of intervention consult the safety technical data sheets of the chemical product to be dosed and proceed as follows:

1. Turn off the pump
2. immerse the foot strainer and the delivery tube in clean water and run the pump for a few minutes to make water flow through the pump head.

If there are any crystal formations requiring removal proceed as follows:

1. Immerse the filter and the delivery tube in a solution that can remove the crystal formations (for example, hydrochloric acid for sodium hypochlorite crystals).
2. Run the pump for a few minutes to allow the product to carry out a deep cleaning action.
3. Once this action has been completed, repeat it using water and connect the pump to the system.

.

4.4 How to change parts after normal wear

Changing fuses (model 5x20 – 1.6 A – Delayed)

Proceed as follows:

1. (Where included) Position the stroke regulating knob to minimum.
2. Unscrew the screws for the frame.
3. Open the front and rear part being careful of the knob's return spring (where included)
4. Change the fuse which is clearly visible on the circuit.
5. Reassemble everything being careful that the regulating knob (where included) is always at minimum and that the spring is inside it.

Cleaning the valves

Proceed as follows:

1. With a small implement lever the groove on the thread of the pump head.
2. Pull out the valve cartridge being careful not to remove or damage the O-rings.
3. Wash the valve cartridge under running water.
4. To wash the valve thoroughly, dis-assemble the valve cartridge, being careful not to lose the parts that it is composed of.
5. Re-assemble the valve following the order of assembly indicted in the exploded view in figure 7.

6. Re-insert the cartridge into the pump head.

Changing sealing O-rings and the diaphragm
Proceed as follows:
1. Remove the small round cover from the pump head using a small utensil to lever it off.
2. Unscrew the 4 screws on the pump head with a Ø 4mm hex key.
3. Remove the pump head being very careful that it does not contain any liquid.
4. Remove the old 3143 O-ring with a screwdriver and insert the new one.
5. Unscrew the diaphragm by hand (if necessary use a pliers wrench), then screw on the new diaphragm after having added a small amount of Loctite® 222 to the thread of the diaphragm.
6. Position the pump head and screw on the 4 screws by cross-tightening them for a perfect seal. To avoid the screws from accidentally loosening we recommend using a drop of Loctite® 222 on the thread of each screw.

4.5 Troubleshooting

Problem: the pump does not turn on and the LED stays off
Solution:
1. Make sure the connection to the electrical network has been set up correctly in accordance with the information provided on the pump's identification plate.
2. Check the integrity of the fuse.
3. Change the electronic board.

Problem: the pump turns on but does not beat
Solution for all models in constant mode:
1. Make sure the knob is not at 0%.
2. Make sure the pump is not in temperature alarm or level alarm.

Solution for all PI models in proportional mode:
1. Make sure the connection between contactor and pump is set up correctly.
2. Make sure the contactor emits pulses.
3. Make sure the pump is in perfect running order, following the procedure below:
   - Select the interval scale 1…100
   - Set the regulating knob to **max** (fully rotate clockwise):
   - Disconnect the contactor connector from the pump (BNC - red)
   - Using pliers try to touch the centre of the BNC with the outer edge
   - The pump should emit a beat, if it does not do so, change the electronic board.

Solution for all mA models in proportional mode:
1. Make sure the connection between instrument and pump is set up correctly.
2. Using a digital multi-meter make sure the instrument is providing the correct current.

Problem: the pump is working correctly but does not inject liquid into the system
Solution:
1. Check the level of product in the tank.
2. Make sure the foot strainer is not clogged up.
3. Make sure that the injection valve is not clogged up.
4. Carry out a maintenance operation on the suction/delivery valves. If evident malformations arise make sure that the material is compatible with the product being dosed by consulting the chemical compatibility table, and then go ahead with changing it.

Problem: liquid leaking from the pump head
Solution:
1. Make sure the delivery tube is inserted well and that the ring nut is tight.
2. Check the O-rings on the fittings.
3. Dis-assemble the pump head and check whether the sealing O-ring of the membrane is intact.

5 Chemical Compatibility Table

Dosing pumps are widely used for dosing chemical products. It is important to select the most suitable material for the liquid to be dosed. The CHEMICAL COMPATIBILITY TABLE is a precious aid to that end.
The following Table must be used as an indicative instrument. Modifications in the transported fluid composition or particular service conditions can reduce the resistance of the materials.

Product	Formula	Ceram.	PVDF	PP	PVC	Hastel.	PTFE	FPM (Viton)	EPDM (Dutral)	NBR	PE
Acetic Acid, Max 75%	CH3COOH	2	1	1	1	1	1	3	1	3	1
Concentrated hydrochloric acid	HCl	1	1	1	1	1	1	1	3	3	1
Hydrofluoric acid 40%	H2F2	3	1	1	2	2	1	1	3	3	1
Phosphoric acid, 50%	H3PO4	1	1	1	1	1	1	1	1	3	1
Nitric acid, 65%	HNO3	1	1	2	3	1	1	1	3	3	2
Sulphuric acid 85%	H2SO4	1	1	1	1	1	1	1	3	3	1
Sulphuric acid 98.5%	H2SO4	1	1	3	3	1	1	1	3	3	3
Amines	R-NH2	1	2	1	3	1	1	3	2	3	1
Sodium bisulphite	NaHSO3	1	1	1	1	1	1	1	1	1	1
Sodium carbonate (Soda)	Na2CO3	2	1	1	1	1	1	2	1	1	1
Iron chloride	FeCl3	1	1	1	1	1	1	1	1	1	1
Calcium hydroxide	Ca(OH)2	1	1	1	1	1	1	1	1	1	1
Sodium hydroxide (Caustic soda)	NaOH	2	1	1	1	1	1	2	1	2	1
Calcium hypochlorite	Ca(OH)2	1	1	1	1	1	1	1	1	3	1
Sodium hypochlorite, 12.5%	NaOCl + NaCl	1	1	2	1	1	1	1	1	2	2
Potassium permanganate 10%	KMnO4	1	1	1	1	1	1	1	1	3	1
Hydrogen peroxide, 30%	H2O2	1	1	1	1	1	1	1	2	3	1
Aluminium sulphate	Al2(SO4)3	1	1	1	1	1	1	1	1	1	1
Copper sulphate	CuSO4	1	1	1	1	1	1	1	1	1	1

Component with *excellent resistance* **-1-**

Component with *fair resistance* **-2-**

Non-resistant component **-3-**

Construction materials of pump and accessories

Polyvinyldene fluoride (PVDF)	**Pump body, valves, fittings, tubes**
Polypropylene (PP)	**Pump body, valves, fittings**
PVC	**Pump body**
Hastelloy C-276 (Hastelloy)	**Injection valve spring**
Polytetrafluoroethylene (PTFE)	**Diaphragm**
Polyethylene (PE)	**Tubes**

Disclaimer

The information included in these tables has been obtained from highly qualified sources which we deem reliable and they are provided without any guarantee, explicit or implicit, concerning their exactness.
Conditions or methods for handling, storage and use of the material are beyond our control and/or knowledge.
For this reason and for other reasons we will not be held liable thereof and we expressly waive obligations of claim for damages or relating to the information contained herein.

6 Return to the After-sales service

The material must be sent back in its packaging with all its original protection devices before the guarantee period is completed.
The system must be clean and the chemical product removed from the tubes.

The manufacturer declines any responsibility regarding damages caused by transportation, if the aforementioned conditions are not respected.

7 GUARANTEE CERTIFICATE

In a period of time the producer agrees to provide spare parts for any parts that they, or their authorised representative, believe present factory or material defects free of charge; or to carry out the repair directly or through authorised workshops.
The producer is nevertheless excluded from any other responsibility and obligation regarding other expenses, direct or indirect damage and losses deriving from the use or from the impossibility, either total or partial, to use the pumps.

Any repairs or replacing of parts will neither extend nor renew the duration of the warranty period.

Costs to assemble and dis-assemble the pump from the system, shipping costs and consumables (filters, valves, etc.) are borne by the user.

The manufacturer's obligations, envisioned in the previous paragraphs, are not valid if:

- The pumps are not used in compliance with the instructions provided on the operating and maintenance booklet.
- The pumps are repaired, dismantled or modified by workshops that have not been authorised by the manufacturer.
- Non-original parts have been used.
- The injection systems have been damaged by non-compliant products.
- The electrical systems breakdown due to external factors such as surges, any kind of electrical discharges etc.

WHEN THE WARRANTY PERIOD EXPIRES 12 MONTHS AFTER DELIVERY OF THE PUMP, THE MANUFACTURER IS RELIEVED OF ANY RESPONSIBILITY AND OBLIGATION DESCRIBED IN THE ABOVE PARAGRAPHS!

8 Dimensioni – Dimensions

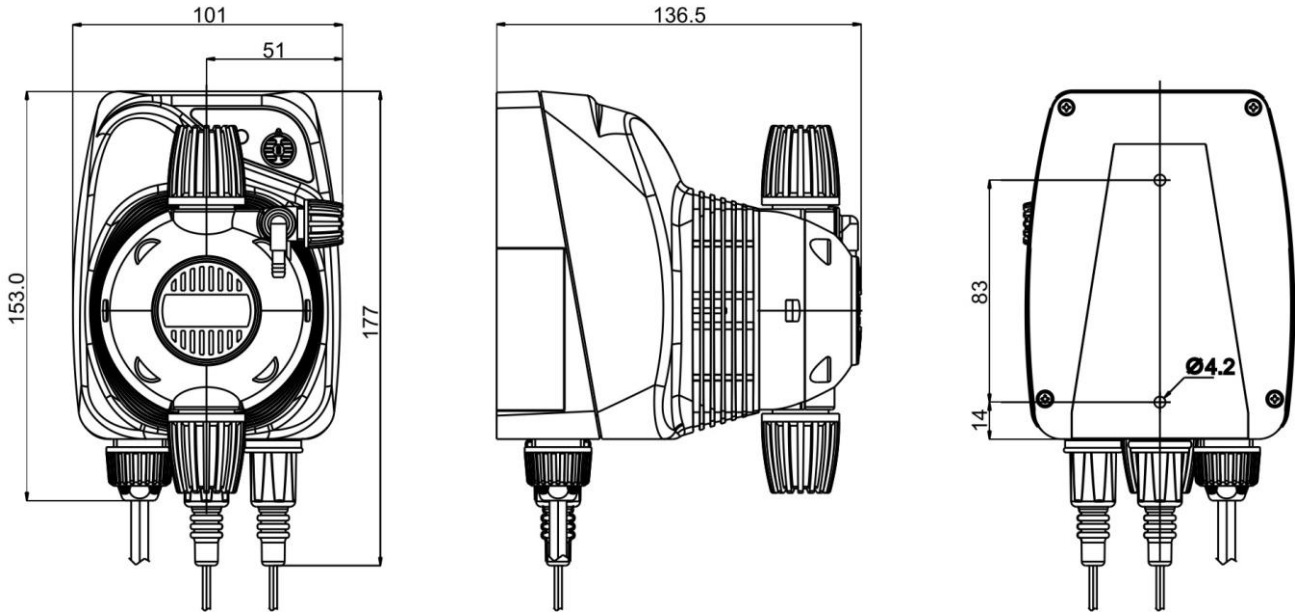

FIG. 1: SERIE "HC150" A MURO – WALL MOUNTING

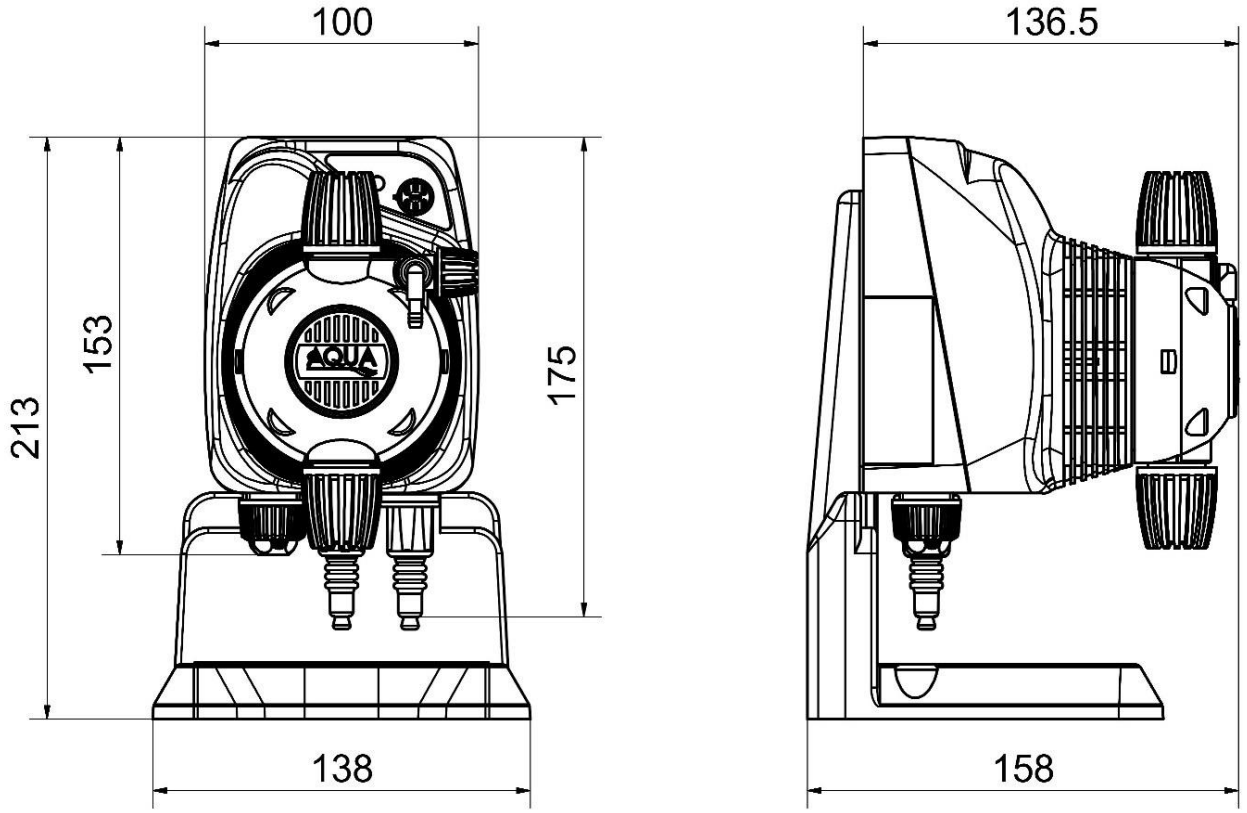

FIG. 2: SERIE "HC150" CON BASE – BASE MOUNTING

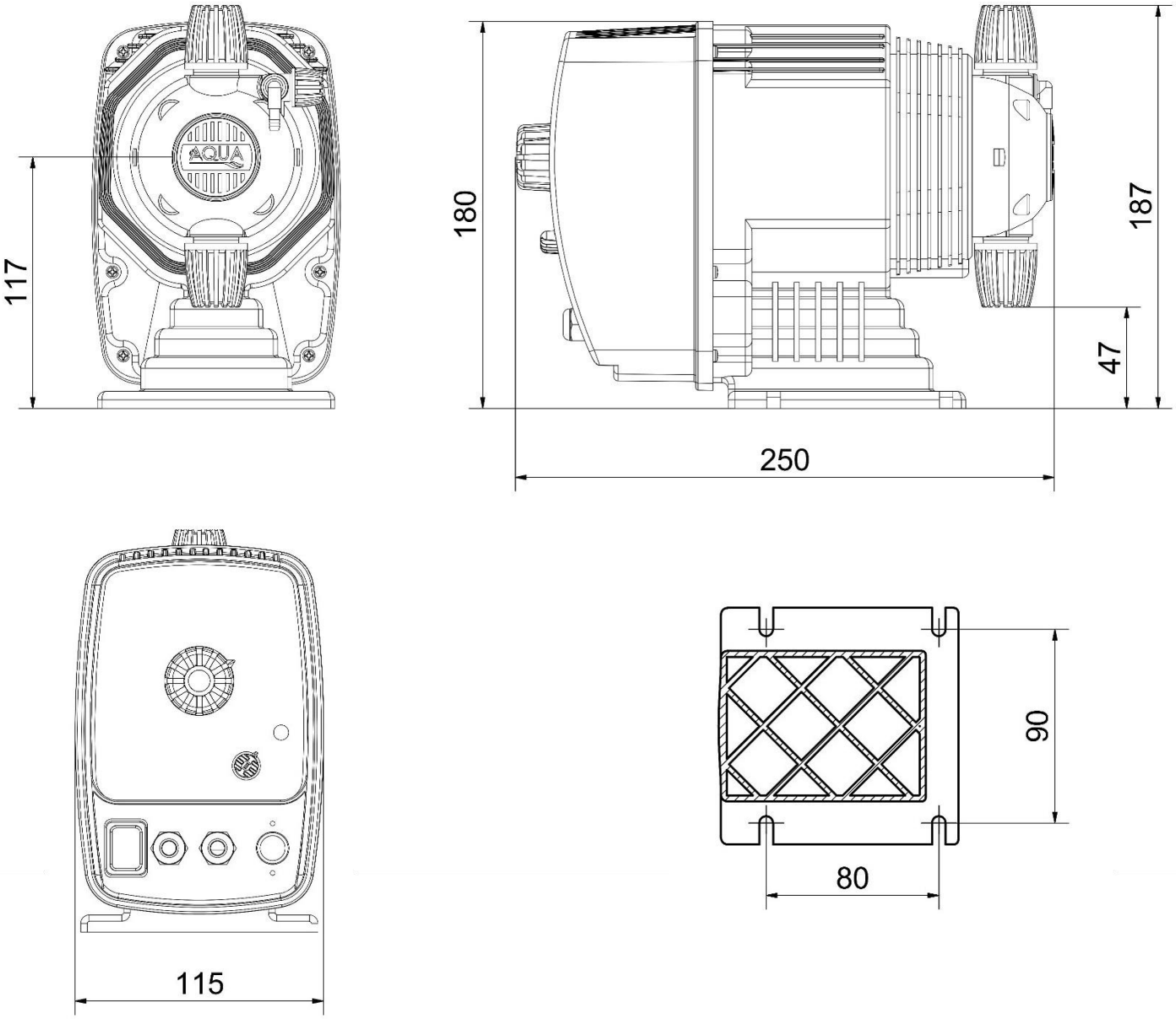

FIG. 2A: SERIE "HC101" CON BASE – BASE MOUNTING

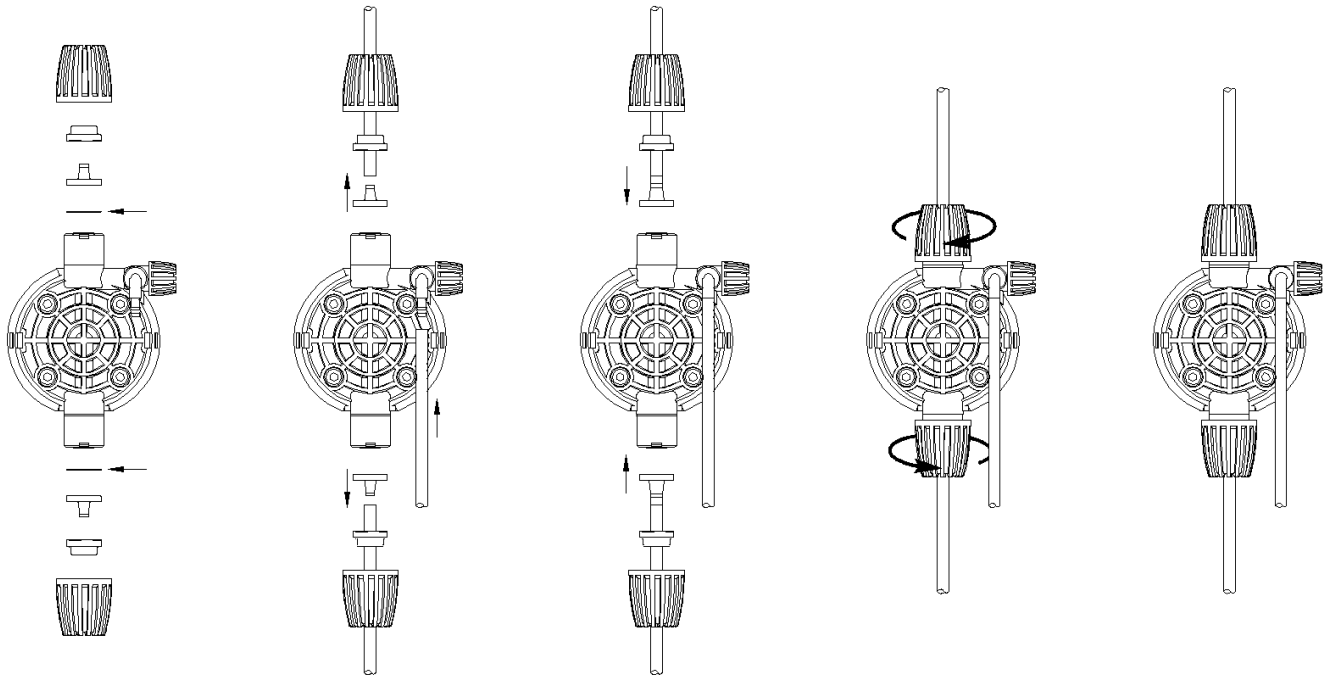

FIG. 3: COLLEGAMENTI TUBI SUL CORPO POMPA – PUMP HEAD CONNECTIONS

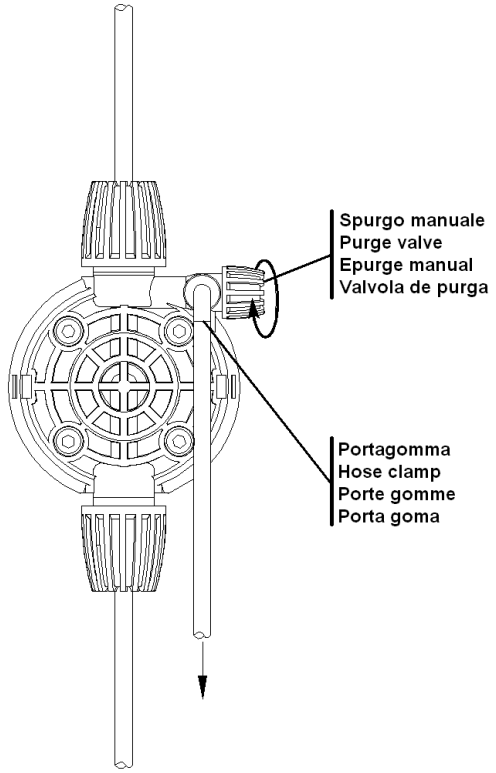

FIG. 4: SPURGO MANUALE – MANUAL PURGE

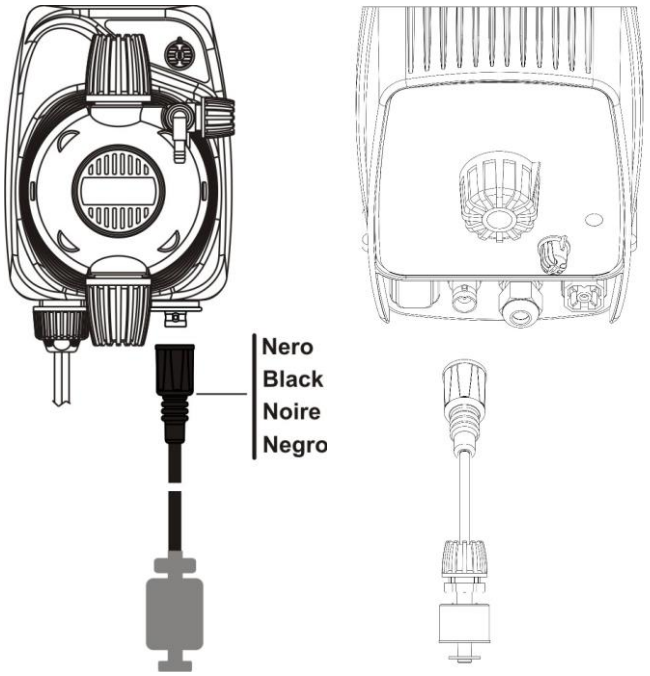

FIG. 5: COLLEGAMENTO SONDA DI LIVELLO – LOW LEVEL PROBE CONNECTION - OPTIONAL

9 Esploso / Exploded view

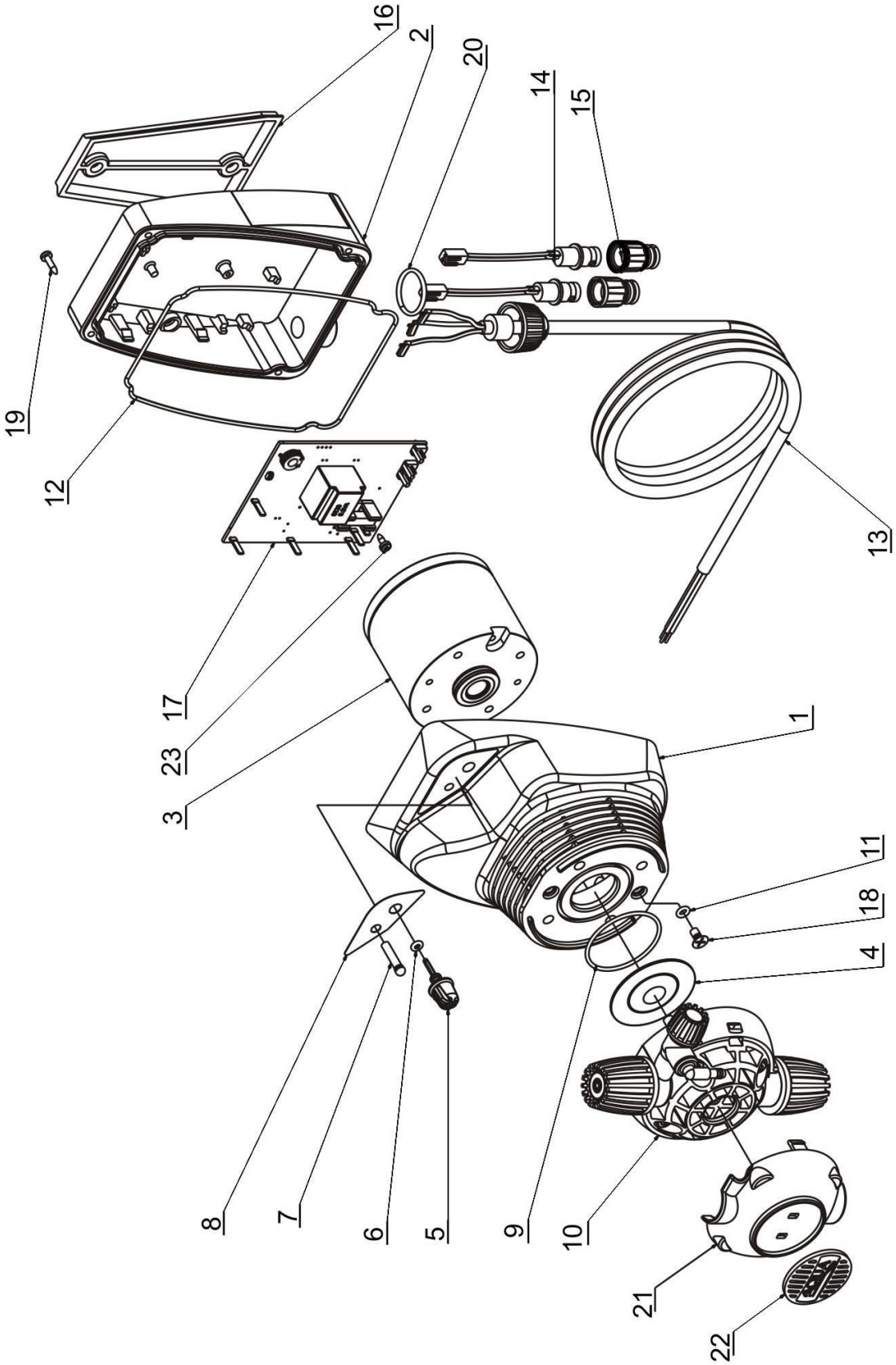

Fig. 6: HC150 Esploso / Exploded view

Descrizione / Description

#	Codice	Descrizione	Q.tà
1	ADSP9500040	CASSA HC150	1
2	ADSP9500030	COPERCHIO POSTERIORE HC150	1
3	ADSP6000287	MAGNETE COMPLETO D70 – mod. 3-5	1
	ADSP6000294	MAGNETE COMPLETO D60 – mod. 0	
	ADSP6000295	MAGNETE COMPLETO D60 – mod. 1-2	
	ADSP6000296	MAGNETE COMPLETO D70 – mod. 4	
4	ADSP9200001	DIAFRAMMA PTFE DYNEON – mod. 1-2-3-4	1
	ADSP9200003	DIAFRAMMA PTFE DYNEON – mod. 0-5	
5	ADSP9300004	MANOPOLA TRIMMER HC897	1
6	ADSP5007072	OR "R1" 2.6x1.9	1
7	ADSP9500001	GUIDA LUCE PER HC150	1
8	ADSP9500050	ETICHETTA HC150 NEUTRA	1
9	ADSP5007200	OR - RIF. 3143 - VITON	1
	ADSP5007209	OR - RIF. 3143 - DUTRAL	
10	ADSP9000100	CORPO POMPA 1-14 PP-GL-VT COMPLETO HC997	1
11	MG010370	OR2015	2
12	OR12	OR2475-BS048	1
13	ADSP9500070	CAVO ALIMENTAZIONE PER HC150	1
14	ADSP9500010	CONNETTORE BNC FEMMINA CABLATO L=80mm (PER HC150)	2
15	ADSP6000948	PROTEZIONE BNC FEMMINA DA PANNELLO	2
16	ADSP6020221	STAFFA HC100/HC897/HC997 PP NERO	1
17	ADSP9500085	SCHEDA ELETTRONICA HC150 costante – mod. 1 e 2	1
	ADSP9500082	SCHEDA ELETTRONICA HC150 costante – mod. 3	1
	ADSP9500084	SCHEDA ELETTRONICA HC150 PI – mod. 1 e 2	1
	ADSP9500081	SCHEDA ELETTRONICA HC150 PI – mod. 3	1
	ADSP9500083	SCHEDA ELETTRONICA HC150 mA – mod. 1 e 2	1
	ADSP9500080	SCHEDA ELETTRONICA HC150 mA – mod. 3	1
18	ADSP6000708	VITE M4X8 UNI 7688 (AF-TSTC) INOX A2	2
19	ADSP6000714	VITE M 2.9x13 UNI 6954 (TCTC) INOX A2	4
20	ADSP9500130	ANELLO IDENTIFICAZIONE INGRESSI BNC	1
21	ADSP9000002	COVER GIALLO RAL 1007 CORPO POMPA 1-14LT HC897	1
22	ADSP9000003	TARGHETTA NERA CON LOGO AQUA PER CORPO POMPA 1-14LT HC897	1
23	ADSP6000749	VITE M 2.9X9.5 UNI 6954 (AF-TCTC) INOX A2	1

Descrizione / Description

#	Code	Description	Q.ty
1	ADSP9500040	FRAME HC150	1
2	ADSP9500030	REAR COVER HC150	1
3	ADSP6000287	COMPLET MAGNET D70 – mod. 3-5	1
	ADSP6000294	COMPLET MAGNET D60 – mod. 0	
	ADSP6000295	COMPLET MAGNET D60 – mod. 1-2	
	ADSP6000296	COMPLET MAGNET D70 – mod. 4	
4	ADSP9200001	PTFE DYNEON DIAPHRAGM – mod. 1-2-3-4	1
	ADSP9200003	PTFE DYNEON DIAPHRAGM – mod. 0-5	
5	ADSP9300004	TRIMMER KNOB HC897	1
6	ADSP5007072	OR "R1" 2.6x1.9	1
7	ADSP9500001	LIGHT GUIDE FOR HC150	1
8	ADSP9500050	NEUTRAL HC150 LABEL	1
9	ADSP5007200	OR - RIF. 3143 - VITON	1
	ADSP5007209	OR - RIF. 3143 - DUTRAL	
10	ADSP9000100	PUMP HEAD 1-14 PP-GL-VT COMPLETE HC997	1
11	MG010370	OR2015	2
12	OR12	OR2475-BS048	1
13	ADSP9500070	POWER SUPPLY CABLE FOR HC150	1
14	ADSP9500010	FEMALE CABLED BNC CONNECTOR L=80mm (FOR HC150)	2
15	ADSP6000948	FEMALE PANEL BNC PROTECTION	2
16	ADSP6020221	BLACK HC100/HC897/HC997 PP BRACKET	1
17	ADSP9500085	ELECTRONIC BOARD HC150 costante – mod. 1 and 2	1
	ADSP9500082	ELECTRONIC BOARD HC150 costante – mod. 3	1
	ADSP9500084	ELECTRONIC BOARD HC150 PI – mod. 1 and 2	1
	ADSP9500081	ELECTRONIC BOARD HC150 PI – mod. 3	1
	ADSP9500083	ELECTRONIC BOARD HC150 mA – mod. 1 and 2	1
	ADSP9500080	ELECTRONIC BOARD HC150 mA – mod. 3	1
18	ADSP6000708	M4X8 UNI 7688 (AF-SLOTTED FLAT HEAD SCREW) STAINLESS STEEL A2 SCREWS	2
19	ADSP6000714	M 2.9x13 UNI 6954 (SLOTTED PAN HEAD SCREW) STAINLESS STEEL A2 SCREWS	4
20	ADSP9500130	BNC INPUTS IDENTIFICATION RING	1
21	ADSP9000002	COVER YELLOW RAL 1007 PUMP HEAD 1-14LT HC897	1
22	ADSP9000003	BLACK PLATE WITH AQUA LOGO FOR PUMP HEAD 1-14LT HC897	1
23	ADSP6000749	M 2.9X9.5 UNI 6954 (AF-SLOTTED PAN HEAD SCREW) STAINLESS STEEL A2 SCREWS	1

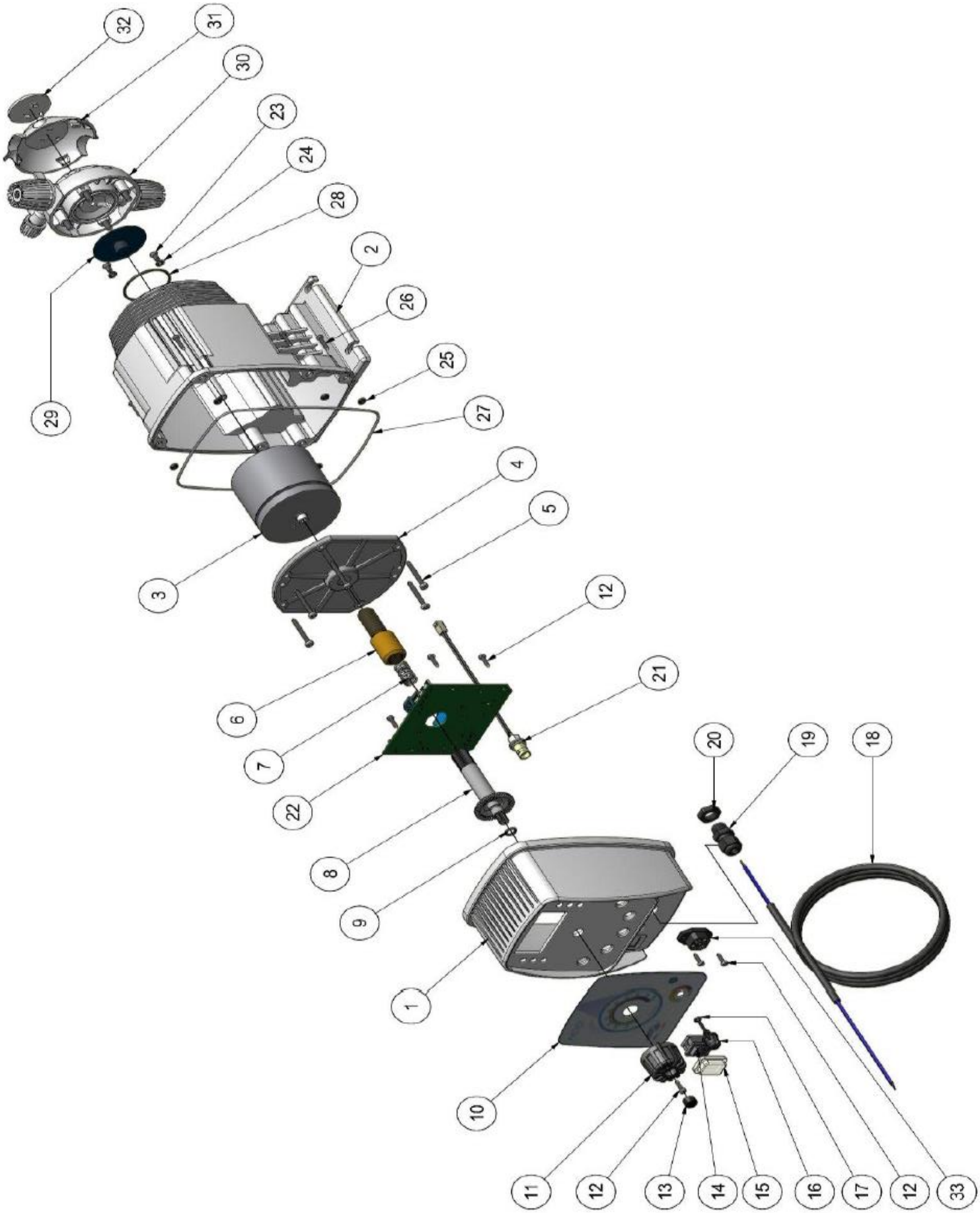

Fig. 6A: HC101 Esploso / Exploded view

Descrizione / Description

#	Codice	Descrizione	Q.ta'
1	ADSP6020235	CASSA HC101 (EX ID-R) PP FRONTALE NERA	1
2	ADSP6020234	CASSA HC101 (EX ID-R) PP IDRAULICA 1-14L NERO	1
3	ADSP6000295	MAGNETE COMPLETO D60 VERS.2 230V - SILENZIOSO	1
4	ADSP6000738	INSERTO REGOLAZIONE CORSA 04-18 CON PIASTRA	1
5	MB010300	VITE M 3,5 X 32 UNI 6954 (AF-TCTC) INOX A2	6
6	ADSP6000739	VITE REGOLAZIONE CORSA 04-18	1
7	ADSP5003020	MOLLA PER RITORNO REGOLAZIONE CORSA	1
8	ADSP6000759	PERNO REGOLAZIONE CORSA LAVORATO	1
9	ADSP5007035	OR - RIF. 106 - VITON NERO - 75 Shore A	1
10	ADSP7000658	ETICHETTA POLICARBONATO HC101 AQUA	1
11	ADSP6000507	MANOPOLA REGOLAZIONE CORSA AQUA	1
12	ADSP6000714	VITE M 2,9 X 13 UNI 6954 (TCTC) INOX A2	5
13	ADSP6000542	TAPPO IN PVC NERO PER VITE M4 CORPO POMPA	1
14	ADSP6000516	INTERRUTTORE ON/OFF 3A 250V TIPO A BILICO	1
15	ADSP6000686	COVER TRASPARENTE DI PROTEZIONE PER INTERRUTTORE ON/OFF	1
16	ADSP9300004	MANOPOLA REGOLAZIONE HC897 PER TRIMMER PT10 PP NERA	1
17	ADSP5007104	OR - RIF. 2012 - VITON NERO	1
18	ADSP6020011	*CAVO ALIMENTAZIONE S/SPINA METRI 3 - H05VV-F 3X0.75 -	1
19	ADSP6000424	PRESSACAVO PASSO PG7 - 1900.07 - NERO	1
20	ADSP6000626	DADO PG7 NERO CH17	1
21	ADSP6000292	CONNETTORE BNC FEMMINA CONN.CRIMP. 2.54 L160 R/N CABLATO PER SIMPOOL	1
22	ADSP9500230	SKD HC101 230V PI-Livello/magnete D.60-70	1
23	ADSP6000708	VITE M 4 X 8 UNI 7688 (AF-TSTC) INOX A2	3
24	MG010370	OR - RIF. 2015 - NBR	2
25	ADSP5007072	OR "R1" 2,60X1,90 - NBR	6
26	ADSP6000800	VITE M 2,9 X 19 UNI 6954 (AF-TCTC) INOX A2	6
27	ADSP5007128	OR – RIF. 2612 – NBR70 154.81X1.78	1
28	ADSP5007133	OR - RIF. ORM0380-20 38X2	1
29	ADSP9200001	DIAFRAMMA PTFE DYNEON 1614 1-14L HC897 M12X1	1
30	ADSP9000I00	CORPO POMPA 1-14 PP-GL-VT COMPLETO HC897/797	1
31	ADSP9000002	COVER GIALLO RAL 1007 CORPO POMPA 1-14LT HC897	1
32	ADSP9000003	TARGHETTA NERA CON LOGO AQUA PER CORPO POMPA 1-14LT HC897	1
33	ADSP6000835	CONNETTORE MASCHIO 4 VIE G4A5M CABLATO SERVIZI 1XPANDUIT 2 VIE	1

Descrizione / Description

#	Codice	Descrizione	Q.ta'
1	ADSP6020235	FRAME HC101 (EX ID-R) PP FRONT BLACK	1
2	ADSP6020234	FRAME HC101 (EX ID-R) PP IDRAULIC 1-14L BLACK	1
3	ADSP6000295	COMPLETE MAGNET D60 VERS.2 230V - SILENT	1
4	ADSP6000738	INSERT STROKE ADJUSTMENT 04-18 WITH PLATE	1
5	MB010300	SCREW M 3,5 X 32 UNI 6954 (AF-TCTC) INOX A2	6
6	ADSP6000739	SCREW STROKE ADJUSTMENT 04-18	1
7	ADSP5003020	SPRING FOR RETURN STROKE ADJUSTMENT	1
8	ADSP6000759	PIN STROKE ADJUSTMENT WORKED	1
9	ADSP5007035	OR - RIF. 106 - VITON BLACK - 75 Shore A	1
10	ADSP7000658	LABEL POLYCARBONATE HC101 AQUA	1
11	ADSP6000507	KNOB STROKE ADJUSTMENT AQUA	1
12	ADSP6000714	SCREW M 2,9 X 13 UNI 6954 (TCTC) INOX A2	5
13	ADSP6000542	CAP PVC BLACK FOR SCREW M4 PUMP HEAD	1
14	ADSP6000516	SWITCH ON/OFF 3A 250V (TWO POSITIONS)	1
15	ADSP6000686	PROTECTIVE COVER FOR ON/OFF SWITCH	1
16	ADSP9300004	KNOB ADJUSTMENT HC897 FOR TRIMMER PT10 PP BLACK	1
17	ADSP5007104	OR - RIF. 2012 - VITON BLACK	1
18	ADSP6020011	*POWER CABLE WITHOUT PLUG METER 3 - H05VV-F 3X0.75 -	1
19	ADSP6000424	GLAND PG7 - 1900.07 - BLACK	1
20	ADSP6000626	NUT PG7 BLACK CH17	1
21	ADSP6000292	FEMALE BNC CONNECTOR CONN.CRIMP. 2.54 L160 R/N CABLED FOR SIMPOOL	1
22	ADSP9500230	SKD HC101 230V PI-Level/magnet D.60-70	1
23	ADSP6000708	SCREW M 4 X 8 UNI 7688 (AF-TSTC) INOX A2	3
24	MG010370	OR - RIF. 2015 - NBR	2
25	ADSP5007072	OR "R1" 2,60X1,90 - NBR	6
26	ADSP6000800	SCREW M 2,9 X 19 UNI 6954 (AF-TCTC) INOX A2	6
27	ADSP5007128	OR – RIF. 2612 – NBR70 154.81X1.78	1
28	ADSP5007133	OR - RIF. ORM0380-20 38X2	1
29	ADSP9200001	PTFE DYNEON DIAPHRAGM 1614 1-14L HC897 M12X1	1
30	ADSP9000I00	PUMP HEAD 1-14 PP-GL-VT COMPLETE HC897/797	1
31	ADSP9000002	COVER YELLOW RAL 1007 PUMP HEAD 1-14LT HC897	1
32	ADSP9000003	BACKPLATE WITH AQUA LOGO FOR PUMP HEAD 1-14LT HC897	1
33	ADSP6000835	MALE CONNECTOR 4-WAY G4A5M CABLED SERVIZI 1XPANDUIT 2-WAY	1

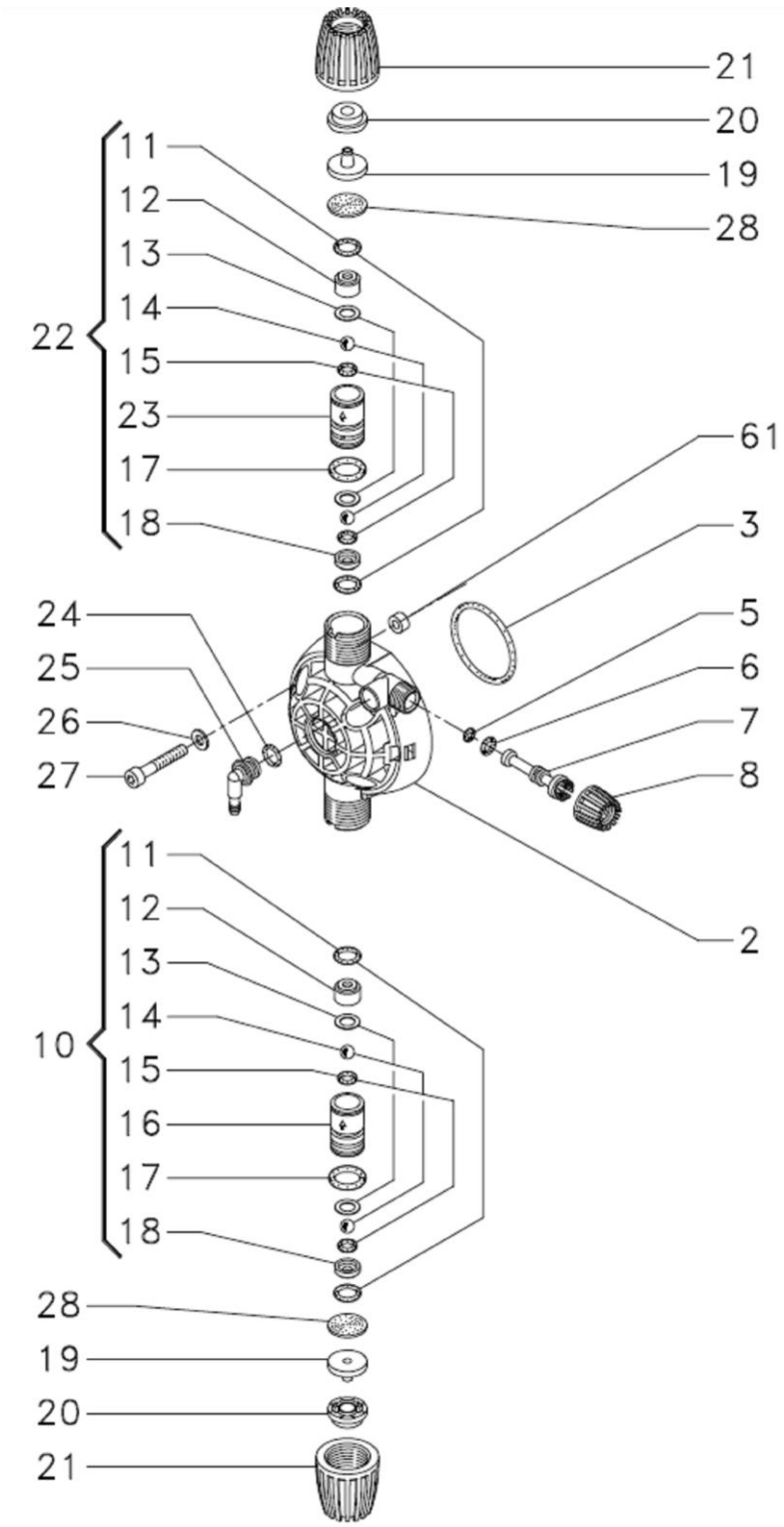

Fig. 7: Corpo pompa e valvole a sfera – Pump head and ball valves

Descrizione / Description

#	Codice	Descrizione	Q.tà
2	ADSP9000001P	CORPO POMPA 1-14 PVDF HC897	1
	ADSP9000001	CORPO POMPA 1-14 PP HC897	1
3	ADSP5007200	OR - RIF. 3143 - VITON NERO	1
	ADSP5007209	OR - RIF. 3143 - DUTRAL NERO	1
5	ADSP5007049V	OR - RIF. 2010 - VITON NERO	1
	ADSP5007055D	OR - RIF. 2010 - DUTRAL NERO	1
6	ADSP5007022	OR - RIF. 2015 - VITON NERO	1
	ADSP5007013	OR - RIF. 2015 - DUTRAL NERO	1
7	ADSP9000004P	STELO OTTURATORE PER SPURGO CORPO POMPA HC897 PVDF	1
	ADSP9000004	STELO OTTURATORE PER SPURGO CORPO POMPA HC897 PP	1
8	ADSP9000005P	GHIERA 1/4" PER SPURGO CORPO POMPA HC897 PVDF	1
	ADSP9000005	GHIERA 1/4" PER SPURGO CORPO POMPA HC897 PP	1
	ADSP9000005G	GHIERA 1/4" PER SPURGO CORPO POMPA HC897 PP GIALLO/DUTRAL	1
10	ADSP9005P00	GRUPPO VALVOLA 1/2" PVDF-PTFE-VT CARTUCCIA ASPIRAZIONE	1
	ADSP9005P02	GRUPPO VALVOLA 1/2" PVDF-PTFE-DT CARTUCCIA ASPIRAZIONE	1
	ADSP9005000	GRUPPO VALVOLA 1/2" PP-GL-VT CARTUCCIA ASPIRAZIONE	1
11	MG010960	OR - RIF. 108 - VITON NERO	4
	MG010970	OR - RIF. 108 - EPDM	4
12	ADSP9000010P	GUIDA SFERA D.6,35 VALVOLA HC897 PVDF	2
12	ADSP9000010	GUIDA SFERA D.6,35 VALVOLA HC897 PP	2
13	ADSP9000015	RONDELLA SPINGI-OR PER VALVOLA SFERA HC897 D8.3x11.8 SP.0.5MM PTFE	4
14	ADSP5007115	SFERA D.6,35 (1/4') PTFE CLASSE 1	4
15	ADSP5007203	OR - RIF. 2021 - VITON NERO	5
	ADSP5007207	OR - RIF. 2021 - DUTRAL NERO	5
16	ADSP9000008P	ASTUCCIO SFERE VALVOLA ASPIRAZIONE HC897 PVDF	1
	ADSP9000008	ASTUCCIO SFERE VALVOLA ASPIRAZIONE HC897 PP	1
17	ADSP5007201	OR - RIF. 3043 - VITON NERO	2
	ADSP5007208	OR - RIF. 3043 - DUTRAL NERO	2
18	ADSP9000011P	SEDE SFERA D.6,35 VALVOLA HC897 PVDF	2
	ADSP9000011	SEDE SFERA D.6,35 VALVOLA HC897 PP	2
19	ADSP9000014P	ATTACCO TUBO 4X6 GHIERA 1/2" PVDF	2
	ADSP9000014	ATTACCO TUBO 4X6 GHIERA 1/2" PP	2
20	ADSP9000013P	ADATTATORE TUBO 4X6 GHIERA 1/2" PVDF	2
	ADSP9000013	ADATTATORE TUBO 4X6 GHIERA 1/2" PP	2
21	ADSP9000012P	GHIERA 1/2" PVDF PER VALVOLA A SFERA	2
	ADSP9000012	GHIERA 1/2" PP PER VALVOLA A SFERA	2
	ADSP9000012G	GHIERA 1/2" PP GIALLO/DUTRAL PER VALVOLA A SFERA	2
22	ADSP9005P01	GRUPPO VALVOLA 1/2" PVDF-PTFE-VT CARTUCCIA MANDATA	1
	ADSP9005P03	GRUPPO VALVOLA 1/2" PVDF-PTFE-DT CARTUCCIA MANDATA	1
	ADSP9005001	GRUPPO VALVOLA 1/2" PP-GL-VT CARTUCCIA MANDATA	1
23	ADSP9000009P	ASTUCCIO SFERE VALVOLA MANDATA HC897 PVDF	1
	ADSP9000009	ASTUCCIO SFERE VALVOLA MANDATA HC897 PP	1
24	ADSP5007035	OR - RIF. 106 - VITON NERO	1
	ADSP5007021	OR - RIF. 106 - DUTRAL	1
25	ADSP9000007P	PORTAGOMMA 4X6 PER SPURGO CORPO POMPA HC897 PVDF	1
	ADSP9000007	PORTAGOMMA 4X6 PER SPURGO CORPO POMPA HC897 PP	1
26	ADSP6000701	RONDELLA D05X10 PIANA INOX	8
27	ADSP9000016	VITE M 5 X 30 UNI 5931 (TCEI) INOX A2	4
28	ADSP9000019	RONDELLA D16X0.5 PE NAT	2
61	ADSP5007011	BUSSOLA PER CORPO POMPA D.3,2X6,45X5,5 SANT64A	4

Descrizione / Description

#	Code	Description	Q.ty
2	ADSP9000001P	PUMP HEAD 1-14 PVDF HC897	1
	ADSP9000001	PUMP HEAD 1-14 PP HC897	1
3	ADSP5007200	OR - REF. 3143 - VITON BLACK	1
	ADSP5007209	OR - REF. 3143 - DUTRAL BLACK	1
5	ADSP5007049V	OR - RIF. 2010 - VITON BLACK	1
	ADSP5007055D	OR - RIF. 2010 - DUTRAL BLACK	1
6	ADSP5007022	OR - RIF. 2015 - VITON BLACK	1
	ADSP5007013	OR - RIF. 2015 - DUTRAL BLACK	1
7	ADSP9000004P	SPEAR STEM FOR PUMP HEAD PURGE HC897 PVDF	1
	ADSP9000004	SPEAR STEM FOR PUMP HEAD PURGE HC897 PP	1
8	ADSP9000005P	RING NUT 1/4" FOR PUMP HEAD PURGE HC897 PVDF	1
	ADSP9000005	RING NUT 1/4" FOR PUMP HEAD PURGE HC897 PP	1
	ADSP9000005G	RING NUT 1/4" FOR PUMP HEAD PURGE HC897 PP YELLOW/DUTRAL	1
9	ADSP9000006P	PLUG FOR PUMP HEAD PURGE RING NUT HC897 PVDF	1
	ADSP9000006	PLUG FOR PUMP HEAD PURGE RING NUT HC897 PP	1
10	ADSP9005P00	VALVE UNIT 1/2" PVDF-PTFE-VT SUCTION CARTRIDGE	1
	ADSP9005P02	VALVE UNIT 1/2" PVDF-PTFE-DT SUCTION CARTRIDGE	1
	ADSP9005000	VALVE UNIT 1/2" PP-GL-VT SUCTION CARTRIDGE	1
11	MG010960	OR - RIF. 108 - VITON BLACK	4
	MG010970	OR - RIF. 108 - EPDM	4
12	ADSP9000010P	BALL GUIDE D.6.35 VALVE HC897 PVDF	2
12	ADSP9000010	BALL GUIDE D.6.35 VALVE HC897 PP	2
13	ADSP9000015	OR-COMPRESSION WASHER FOR BALL VALVE HC897 D8.3x11.8 SP.0.5MM PTFE	4
14	ADSP5007115	BALL D.6.35 (1/4') PTFE CLASS 1	4
15	ADSP5007203	OR - RIF. 2021 - VITON BLACK	5
	ADSP5007207	OR - RIF. 2021 - DUTRAL BLACK	5
16	ADSP9000008P	SUCTION BALL VALVE CASE HC897 PVDF	1
	ADSP9000008	SUCTION BALL VALVE CASE HC897 PP	1
17	ADSP5007201	OR - RIF. 3043 - VITON BLACK	2
	ADSP5007208	OR - RIF. 3043 - DUTRAL BLACK	2
18	ADSP9000011P	BALL SEAT D.6.35 VALVE HC897 PVDF	2
	ADSP9000011	BALL SEAT D.6.35 VALVE HC897 PP	2
19	ADSP9000014P	TUBE ATTACHMENT 4X6 RING NUT 1/2" PVDF	2
	ADSP9000014	TUBE ATTACHMENT 4X6 RING NUT 1/2" PP	2
20	ADSP9000013P	TUBE ADAPTER 4X6 RING NUT 1/2" PVDF	2
	ADSP9000013	TUBE ADAPTER 4X6 RING NUT 1/2" PP	2
21	ADSP9000012P	RING NUT 1/2" PVDF FOR BALL VALVE	2
	ADSP9000012	RING NUT 1/2" PP FOR BALL VALVE	2
	ADSP9000012G	RING NUT 1/2" PP YELLOW/DUTRAL FOR BALL VALVE	2
22	ADSP9005P01	VALVE UNIT 1/2" PVDF-PTFE-VT DELIVERY CARTRIDGE	1
	ADSP9005P03	VALVE UNIT 1/2" PVDF-PTFE-DT DELIVERY CARTRIDGE	1
	ADSP9005001	VALVE UNIT 1/2" PP-GL-VT DELIVERY CARTRIDGE	1
23	ADSP9000009P	DELIVERY BALL VALVE CASE HC897 PVDF	1
	ADSP9000009	DELIVERY BALL VALVE CASE HC897 PP	1
24	ADSP5007035	OR - RIF. 106 - VITON BLACK	1
	ADSP5007021	OR - RIF. 106 - DUTRAL	1
25	ADSP9000007P	HOSE CONNECTION 4X6 FOR PUMP HEAD PURGE HC897 PVDF	1
	ADSP9000007	HOSE CONNECTION 4X6 FOR PUMP HEAD PURGE HC897 PP	1
26	ADSP6000701	FLAT STAINLESS STEEL WASHER D05X10	8
27	ADSP9000016	M 5 X 30 UNI 5931 (HEX SOCKET HEAD CAP SCREW) STAINLESS STEEL A2 SCREWS	4
28	ADSP9000019	D16X0.5 PE NAT WASHER	2
61	ADSP5007011	PUMP HEAD BUSHING D.3.2X6.45X5.5 SANT64A	4

Note on environmental protection

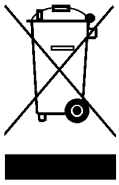

After the implementation of the European Directive 2002/96/EU in the national legal system, the following applies:
Electrical and electronic devices may not be disposed of with domestic waste. Consumers are obliged by lak to return electrical and electronic devices at the end of their service lives to the public collecting points set up for this purpose. Detalis to this are defined by the national law of the respective country. This symbol on the product, the instruction manual or the package indicates that the product is subject to these regulations. By recycling, reusing the material or other forms of utilising old devices, you are making an important contribution to protecting our environment.

PUMPS SERIES HC150